PROJECT REFERENCE NO.	SHEET NO.
W-5601HY	Sig. 2

EDI MODEL 2018ECL-NC CONFLICT MONITOR PROGRAMMING DETAIL

(remove jumpers and set switches as shown)

REMOVE DIODE JUMPERS 1-5, 1-6, 1-9, 1-11, 1-15, 2-5, 2-6, 2-9, 2-11, 2-13, 2-15, 3-7, 3-8, 3-10, 3-12, 3-16, 4-7, 4-8, 4-10, 4-12, 4-14, 4-16, 5-9, 5-11, 5-13, 6-9, 6-11, 6-13, 6-15, 7-10, 7-12, 7-14, 8-10, 8-12, 8-14, 8-16, 9-11, 9-13, 9-15, 10-12, 10-14, 10-16, 11-13, 11-15, 12-14, 12-16, 13-15 and 14-16.

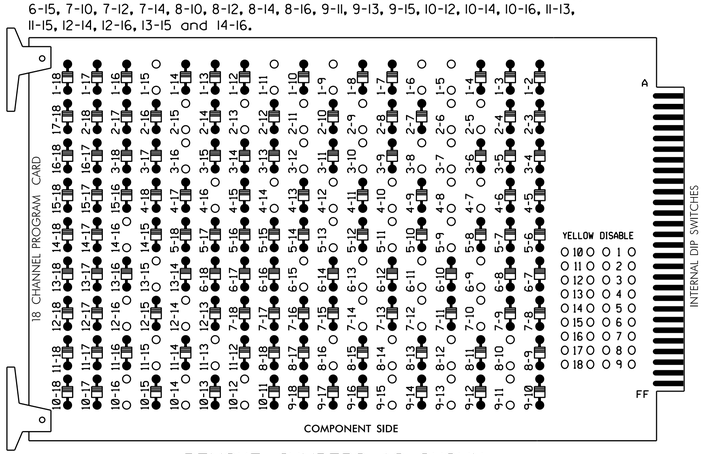

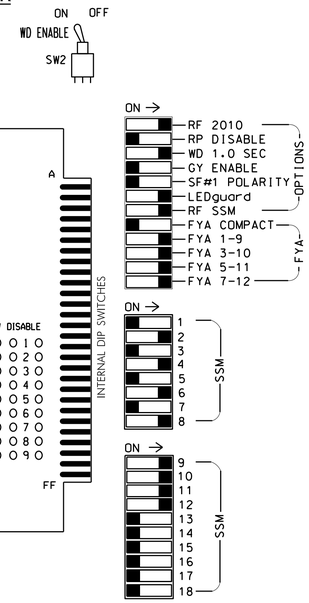

REMOVE JUMPERS AS SHOWN

NOTES:

1. Card is provided with all diode jumpers in place. Removal of any jumper allows its channels to run concurrently.
2. Ensure jumpers SEL2-SEL5 and SEL9 are present on the monitor board.
3. Ensure that Red Enable is active at all times during normal operation.
4. Connect serial cable from conflict monitor to comm. port 1 of 2070 controller. Ensure conflict monitor communicates with 2070.

NOTES

1. To prevent "flash-conflict" problems, insert red flash program blocks for all unused vehicle load switches in the output file. Verify that signal heads flash in accordance with the signal plans.
2. Program controller to Start Up in phases 2 and 6 green.
3. Set power-up flash time to 0 seconds within the controller programming. The conflict monitor will govern startup flash. Ensure STARTUP "RED START" is set to 0 seconds.
4. Enable Simultaneous Gap-Out feature for all phases.
5. Program all timing information into phase banks 1, 2, and 3 unless otherwise noted.
6. Set phase bank 3 maximum limit to 250 seconds for phases used.
7. Program phases 4 and 8 for Double Entry.
8. Ensure start up flash phases are coordinated with flash program block assignments.
9. Program Startup Ped Calls for phases 2, 4, 6, and 8.
10. Set the Red Revert interval on the controller to 1 second.
11. This cabinet and controller are part of the Durham Signal System.

EQUIPMENT INFORMATION

CONTROLLER.....2070E
CABINET.....332 W/ AUX
SOFTWARE.....McCAIN 2033
CABINET MOUNT.....BASE
OUTPUT FILE POSITIONS...18 WITH AUX FILE
LOAD SWITCHES USED.....S1,S2,S3,S4,S5,S6,S7,S8,S9,S10,S11, S12,AUX S1,AUX S2,AUX S4,AUX S5
PHASES USED.....1,2,2 PED,3,4,4 PED,5,6,6 PED,7, 8,8 PED
OVERLAP 1.....*
OVERLAP 2.....*
OVERLAP 3.....*
OVERLAP 4.....*

* See FYA PPLT Programming Detail on Sheet 2.

SIGNAL HEAD HOOK-UP CHART

LOAD SWITCH NO.	S1	S2	S3	S4	S5	S6	S7	S8	S9	S10	S11	S12	AUX S1	AUX S2	AUX S3	AUX S4	AUX S5	AUX S6
CMU CHANNEL NO.	1	2	13	3	4	14	5	6	15	7	8	16	9	10	17	11	12	18
PHASE	1	2	2 PED	3	4	4 PED	5	6	6 PED	7	8	8 PED	OL1	OL2	SPARE	OL3	OL4	SPARE
SIGNAL HEAD NO.	11★	21,22	P21, P22	31★	41,42	P41, P42	51★	61,62	P61, P62	71★	81,82	P81, P82	11★	31★	NU	51★	71★	NU
RED		128			101			134			107							
YELLOW	*	129		*	102		*	135		*	108							
GREEN		130			103			136			109							
RED ARROW													A121	A124		A114	A101	
YELLOW ARROW													A122	A125		A115	A102	
FLASHING YELLOW ARROW													A123	A126		A116	A103	
GREEN ARROW	127			118			133			124								
✋			113			104			119			110						
🚶			115			106			121			112						

NU = Not Used

* Denotes install load resistor. See load resistor installation detail sheet 2.

★ See pictorial of head wiring in detail below.

4 SECTION FYA PPLT SIGNAL WIRING DETAIL

(wire signal heads as shown)

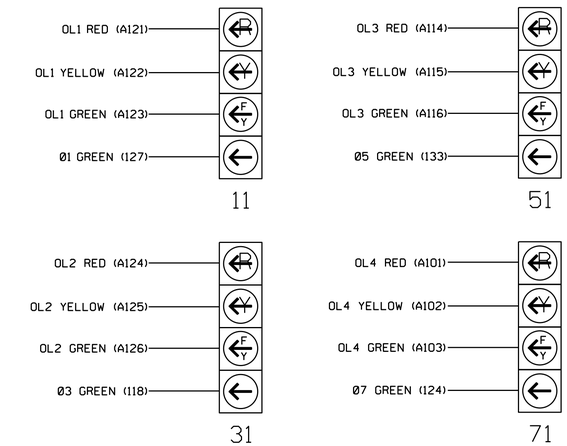

NOTE

1. The sequence display for these signals require special programming. See sheet 2 for programming instructions.

INPUT FILE POSITION LAYOUT

(front view)

		1	2	3	4	5	6	7	8	9	10	11	12	13	14
FILE "I"	U	Ø 1/6	Ø 2	SLOT	SLOT	Ø 3/8	Ø 4	SLOT	SLOT	SYS. DET. S112	SLOT	SLOT	Ø2 PED DC ISOLATOR	Ø6 PED DC ISOLATOR	FS DC ISOLATOR
	L	1A NOT USED	2A Ø 2 2B	EMPTY	EMPTY	3A NOT USED	4A NOT USED	EMPTY	EMPTY	SYS. DET. S113	EMPTY	EMPTY	Ø4 PED DC ISOLATOR	Ø8 PED DC ISOLATOR	ST DC ISOLATOR
FILE "J"	U	Ø 5/2	Ø 6	SLOT	SLOT	Ø 7/4	Ø 8	SLOT	SLOT	SYS. DET. S114	SLOT	SLOT	CH. 3 UNUSED	CH. 1 EVB	SLOT
	L	5A NOT USED	6A Ø 6 6B	EMPTY	EMPTY	7A NOT USED	8A NOT USED	EMPTY	EMPTY	SYS. DET. S115	EMPTY	EMPTY	CH. 4 UNUSED	CH. 2 EVD	EMPTY

EX.: 1A, 2A, ETC. = LOOP NO.'S

TOMAR OSP CARD INSERT CARD INTO SLOT J13

FS = FLASH SENSE
ST = STOP TIME
EVx = EMERGENCY VEHICLE PREEMPT

INPUT FILE CONNECTION & PROGRAMMING CHART

LOOP NO.	LOOP TERMINAL	INPUT FILE POS.	DETECTOR NO.	PIN NO.	ATTRIBUTES	NEMA PHASE
1A	TB2-1,2	I1U	14	56	5 7	1
			10	56	5 7	6
2A	TB2-5,6	I2U	1	39	5 7	2
2B	TB2-7,8	I2L	5	43	5 7	2
3A	TB4-5,6	I5U	16	58	5 7	3
			12	58	5 7	8
4A	TB4-9,10	I6U	3	41	5 7	4
5A	TB3-1,2	J1U	13	55	5 7	5
			9	55	5 7	2
6A	TB3-5,6	J2U	2	40	5 7	6
6B	TB3-7,8	J2L	6	44	5 7	6
7A	TB5-5,6	J5U	15	57	5 7	7
			11	57	5 7	4
8A	TB5-9,10	J6U	4	42	5 7	8
S112	TB6-9,10	I9U	18	60	4	SYS
S113	TB6-11,12	I9L	20	62	4	SYS
S114	TB7-9,10	J9U	17	59	4	SYS
S115	TB7-11,12	J9L	19	61	4	SYS
PED PUSH BUTTONS						
P21,P22	TB8-4,6	I12U	25	67	2	2 PED
P41,P42	TB8-5,6	I12L	27	69	2	4 PED
P61,P62	TB8-7,9	I13U	26	68	2	6 PED
P81,P82	TB8-8,9	I13L	28	70	2	8 PED

NOTE: INSTALL DC ISOLATORS IN INPUT FILE SLOTS I12 AND I13.

NOTE: PROGRAM DETECTOR DELAY AND CARRYOVER TIMES AS SPECIFIED ON SIGNAL DESIGN PLANS.

INPUT FILE POSITION LEGEND: J2L
FILE J
SLOT 2
LOWER

DETECTOR ATTRIBUTES LEGEND:
1-FULL TIME DELAY
2-PED CALL
3-RESERVED
4-COUNTING
5-EXTENSION
6-TYPE 3
7-CALLING
8-ALTERNATE

THIS ELECTRICAL DETAIL IS FOR
THE SIGNAL DESIGN: 05-0462
DESIGNED: December 2016
SEALED: 2/2/2017
REVISED:

TYPICAL TOMAR FIELD WIRE DETAIL

(input file, rear view)

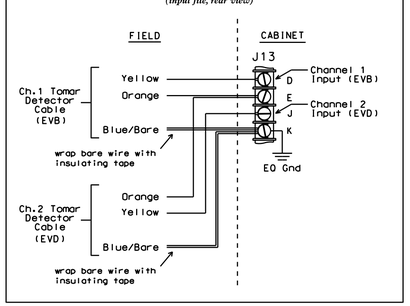

Electrical Detail - Sheet 1 of 2

DOCUMENT NOT CONSIDERED FINAL UNLESS ALL SIGNATURES COMPLETED

ELECTRICAL AND PROGRAMMING DETAILS FOR:

Prepared in the Offices of:
Transportation Mobility and Safety Division
STATE OF NORTH CAROLINA DEPARTMENT OF TRANSPORTATION
Signal Management Section
750 N.Greenfield Pkwy,Garner,NC 27529

US 501 (North Duke Street)
at
Stadium Drive

Division 5 Durham County Durham

PLAN DATE: January 2017	REVIEWED BY: T. Joyce
PREPARED BY: C. Strickland	REVIEWED BY:

REVISIONS	INIT.	DATE

SEAL
NORTH CAROLINA PROFESSIONAL SEAL 030530 ENGINEER ZACHARY M. LITTLE

DocuSigned by: Zachary M. Little 2/17/2017
DC21EFD94F5341F...
SIG. INVENTORY NO. 05-0462

17-FEB-2017 09:33
S:\TIS\SIGNAL\Workgroups\Sig Man\Strickland\05046 2_sm_ele_xxx.dgn
cestrickland